Storm Double Head Shower

PRODUCT CODE	**VST73RBB**
INTERCHANGEABLE INLET CONNECTION	Brushed Black Brushed Brass Brushed Gunmetal Brushed Nickel Chrome
TOP INLET CONNECTION	Brushed Copper
COLOUR/FINISHES	**Brushed Brass (PVD)** Brushed Black (PVD) Chrome Brushed Gunmetal (PVD) Brushed Copper (PVD) Brushed Nickel (PVD) Brushed Brass (PVD)
FEATURES	3 Function Handpiece Built in diverter
DRENCHER DIMENSIONS	250mm Diameter
PRESSURE TYPE	Mains Pressure only
MINIMUM PRESSURE	150kPa
MAXIMUM PRESSURE	500kPa (As per NZ Building Code AS/NZ 3500.1)
WELS RATING - MAINS PRESSURE	3 Star (8.5L/min)
MAXIMUM TEMPERATURE	65°C

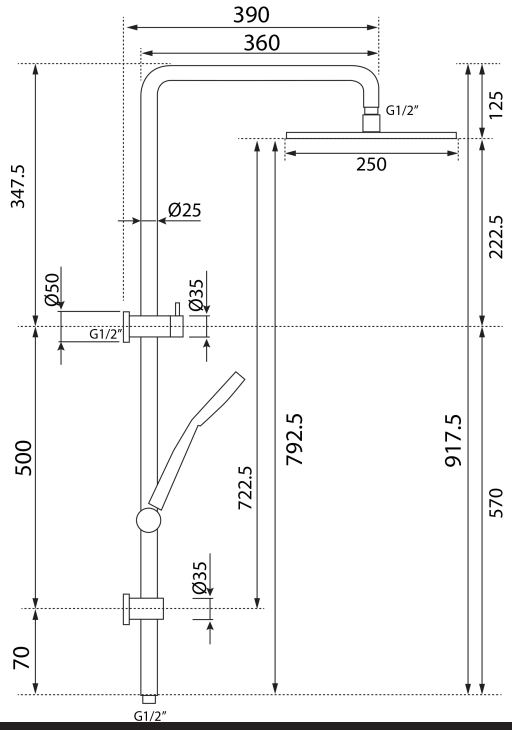

Voda Plumbingware products are in full compliance with the requirements as set out in the New Zealand Building Code:

www.vodaplumbingware.co.nz/building-code-clauses/

This product is not subject to a warning or ban under section 26 of the Building Act 2004.

Specifications and dimensions correct at time of publication however are subject to change without notice.
Please refer to physical product prior to installation.
Installation instructions for this product are available from the product page on vodaplumbingware.co.nz

Freephone 0508 367 366 | info@vodaplumbingware.co.nz

voda plumbingware